Operating and Maintenance Manual

We Know Compaction



VPR 450 DC
VPR 700 DC

0105003
0105004

Attached to the machine is a rating plate. Note down the information given on this plate so that you can recreate the rating plate should the plate be lost.



1 Description

.....

2 Type

.....

3 Serial number

.....

4 Year of construction

.....

5 Mass [kg]

.....

6 Rated power [kW]

.....

Contents

1. Introduction **4**
2. Description **5**
3. Technical data **6**
4. Safety **7**
4.1. Information and safety stickers 12
5. Operation **13**
6. Transport **19**
7. Storage **20**
8. Maintenance **21**
8.1. Maintenance overview **22**
8.2. Description of the maintenance operations **23**
8.2.1. Change the oil in the exciter 23
8.2.2. Check V-belt 23

1. Introduction

This operating and maintenance manual is designed to help you become familiar with your soil compactor and enable you to maintain it and use it for its intended purpose.
The safety and maintenance instructions provided in this manual will help avoid hazards, reduce repair and downtime costs and will increase the reliability and operational readiness of your machine. Follow these instructions precisely.

This operating and maintenance manual must always be kept at the implementation site of the machine and be available to the machine operator.

Turn to your Weber MT dealer if you require any additional information.
Found on the last page of this manual is a QR code. Scan it to acquire the current contact addresses of all Weber MT branches.

You can obtain information on the assembled Honda battery-powered engine and the associated operating and maintenance manual as well as the spare parts list by logging on to *www.honda-engines-eu.com*.

For the latest spare parts list of the machine, open the Weber MT service app or visit the following link:

https://wenet.webermt.com/

2. Description

The machine

The machine is a hand-guided soil compactor that was specifically designed for terrace construction and road building applications.
The machine is composed of a bottom and a top section. The bottom section houses the exciter and rollers made of a plastic that is gentle on the surface, while the top section contains the engine and the required controls.

A battery-powered Honda engine makes the exciter vibrate via a centrifugal clutch. The generated force is transmitted between top and bottom section via a V-belt.

3. Technical data

	VPR 450 DC	VPR 700 DC
Weight		
Operating weight CECE [kg]	114	183
Dimensions		
Overall length [mm]	1186	1245
Overall width/with attachment plates [mm]	460	720
Height with folded guide bar [mm]	720	720
Drive		
Engine manufacturer	Honda	Honda
Type	GXE 2.0H	GXE 2.0H
Performance at operating speed in accordance with ISO 3046-1 [kW]	1.8	1.8
Operating speed [1/min]	3600	3600
Tilted position [maximum, %]	35	35
Vibration		
System	Single shaft vibrator	Single shaft vibrator
Drive concept	mechanical	mechanical
Frequency [Hz]	100	100
Centrifugal force [kN]	8	14
Noise emissions in accordance with 2000/14/EC		
Sound pressure level LPA ascertained in accordance with EN 500, [dB (A)]	97	99
Sound power level LWA ascertained in accordance with EN ISO 3744 and EN 500, [dB (A)]	705	105
Vibration values		
Root-mean-square acceleration value for hand-arm vibration ascertained in accordance with EN 500, [m/s²]	7.8	7.8
In accordance with directive 2006/24/EC, complying with the vibration values is the owner's responsibility		

4. Safety

General

All safety instructions must be read and complied with, as non-compliance will result in

- Danger to life and limb of the user,
- Impairments to the machine or other property.

In addition to the operating manual, the accident-prevention regulations in the country where the appliance is used must be complied with.

Intended use

The machine should only be used in technically faultless condition, as intended, in a safety-conscious and hazard-conscious manner, and in compliance with the instructions in the operating manual.
Malfunctions that may impair safety require that you stop working with the machine immediately. These types of damage must be reported and corrected without delay.
The machine is designed exclusively for compacting:

- Paving slabs made of concrete.

The operator's work position is behind the machine.
The operator must guide the machine safely with both hands on the handle.

Non-intended use

Unless used as intended, the machine involves a risk of personal injury and property damage. The machine is expressly not suitable for:

- compacting frozen subsurfaces,
- compacting hard soils that cannot be compacted further,
- compacting non-bearing material,
- compacting highly cohesive soils,
- Sand,
- Gravel,
- Asphalt.

The responsibility for any damage arising from non-intended use falls on the owner / operator.
Non-intended use or misuse will void all liability and warranty claims.

Residual risk

There is always an increased risk of accidents in the immediate danger area around the machine if the operator fails to notice persons in the vicinity of the machine.
Make anyone close to the machine aware of this risk. The operator must not put the machine into operation unless everyone in the vicinity of the machine is aware of this risk.

Requirements on the operator

This soil compactor may only be operated by suitable operators who are 18 years or older. They must be instructed on how to operate the machine by the owner or by the owner's assigned personnel. The operator must comply with traffic regulations.

The machine must not be operated by children.

Personal protective equipment

Personal protective equipment consisting of

- Hard hat,
- hearing protection,
- Protective gloves,
- Work shoes or boots with toe guard

must be worn during operation and the execution of maintenance on the machine.

Danger areas

The immediate danger area is the direct perimeter around the machine. This area is off-limits to third parties.

Spare parts, changes and conversions

Changes and conversions are prohibited unless made with original Weber MT spare parts. If the machine is modified with other accessories without the approval of Weber MT, the manufacturer will not assume liability for any resulting personal injury or property damage.

All maintenance and repairs must be carried out with original Weber MT spare parts. Untested spare parts may affect the reliability and safety of the machine.

Before starting the machine

There is danger of material damage if the machine is started before necessary maintenance or repairs have been completed. Make sure every time before starting the machine that all work on the machine has been completed.

To avoid injuries, the machine must not be started unless the operator wears the required personal protective equipment.

Objects placed on top of the machine may fall or be flung off during operation or when the machine is started. Therefore, remove all loose objects or tools before starting the machine.

During operation

Monitor the surroundings to avoid injury to third parties or material damage.

Suspend operation and shut down the machine if detecting damage on the machine during operation.

Parking the machine

Always park the machine on a level subsurface with sufficient bearing capacity.

Parked machines presenting an obstacle must be secured in accordance with statutory regulations, particularly in the area of public traffic surfaces.

Cleaning work

Use clear water for cleaning. Do not use flammable solvents. The vapors of the solvents may ignite upon contact with hot components or other sparks.

Perform cleaning tasks only in rooms that are suitable and have been approved for that purpose. Residual oil and lubricants that may have been rinsed off have a negative impact on the environment and must be collected by suitable means (e.g. oil separator).

Remove the battery prior to cleaning.

The engine must not be cleaned with a high-pressure cleaner.

Inspection

The machine must be inspected in accordance with the corresponding implementation conditions and operating conditions to ensure its operationally safe status. This inspection should be performed as needed by an expert - however, no less than once a year. The findings of the inspection must be stored in writing until the time of the next inspection.

Safety instructions and warnings

A variety of safety instructions and warnings are used throughout this operating manual.
The following explains the meaning of signal words and symbols.

ATTENTION	ATTENTION warns of the danger of material damage.
⚠ **CAUTION**	CAUTION warns of the danger of slight injury.
⚠ **WARNING**	WARNING warns of a danger that may lead to death or serious injury.
⚠ **DANGER**	DANGER warns of a danger that will lead to death or serious injury unless avoided.



The information symbol provides supplemental information on the operation of the machine and points to complementary technical information.

4.1. Information and safety stickers

	Sticker	Meaning
1		All threaded unions must be checked for firm seat on a regular basis and, particularly, after initial use.
2	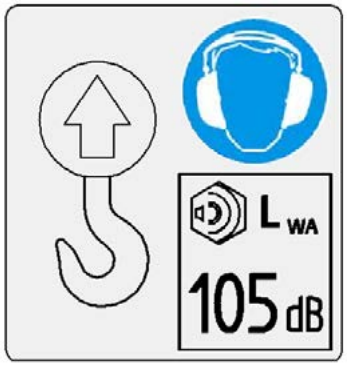	Use the designated lifting ring to lift the machine. Sound power level 105 dB (A), Wear ear protection.

5. Operation

Preparing the machine for initial use

- ▶ Remove all packaging material.
- ▶ Check all components for visible damage. Do not start the machine if detecting visible damage. Contact the responsible dealer.
- ▶ Check if the shipment of the machine and its components is complete.
- ▶ Set up the machine at its place of use.

Operating positions on the machine

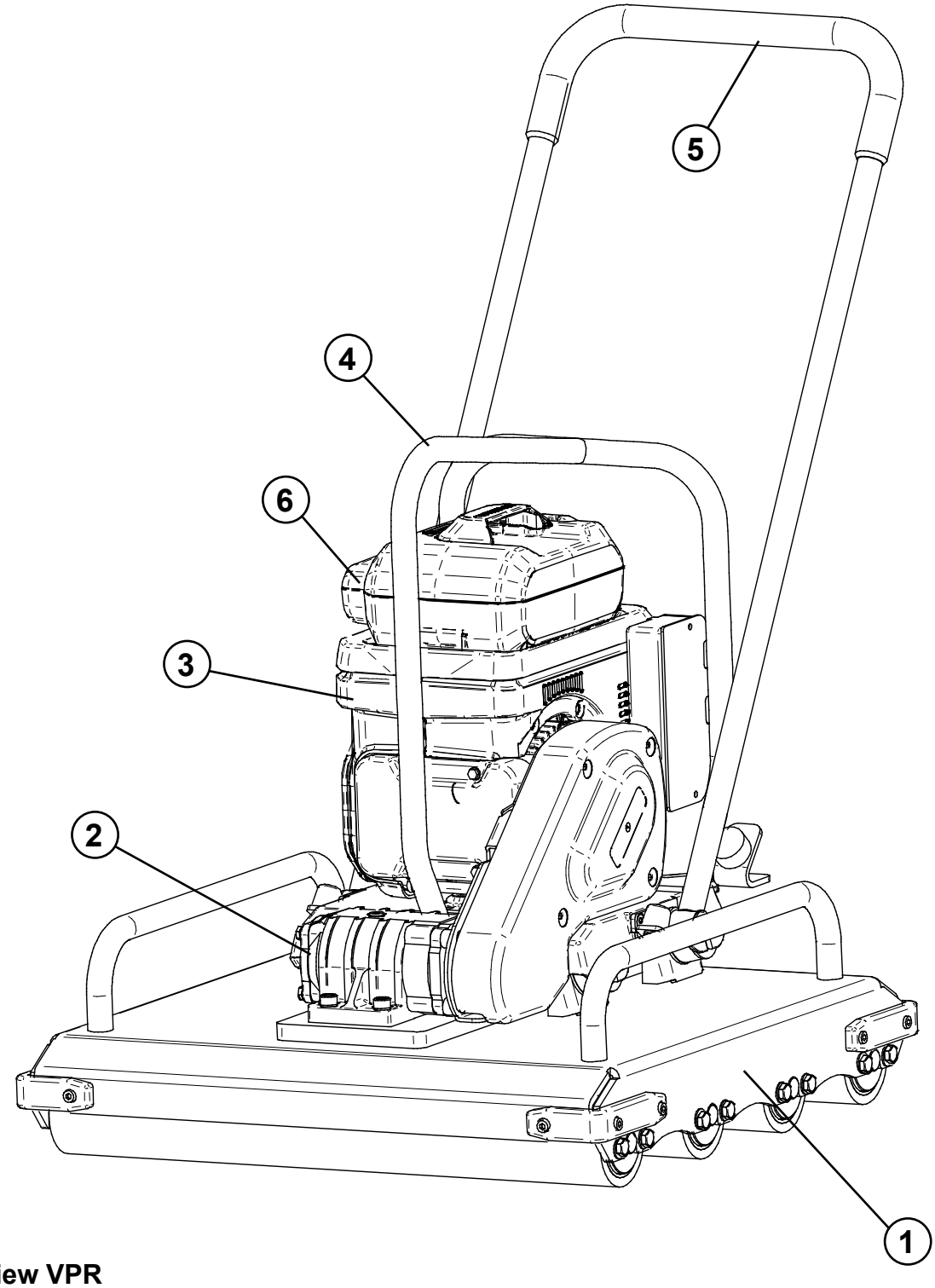

Overall view VPR

1	Roller frame with rollers	4	Lifting ring
2	Exciter	5	Handle
3	Engine	6	Battery pack

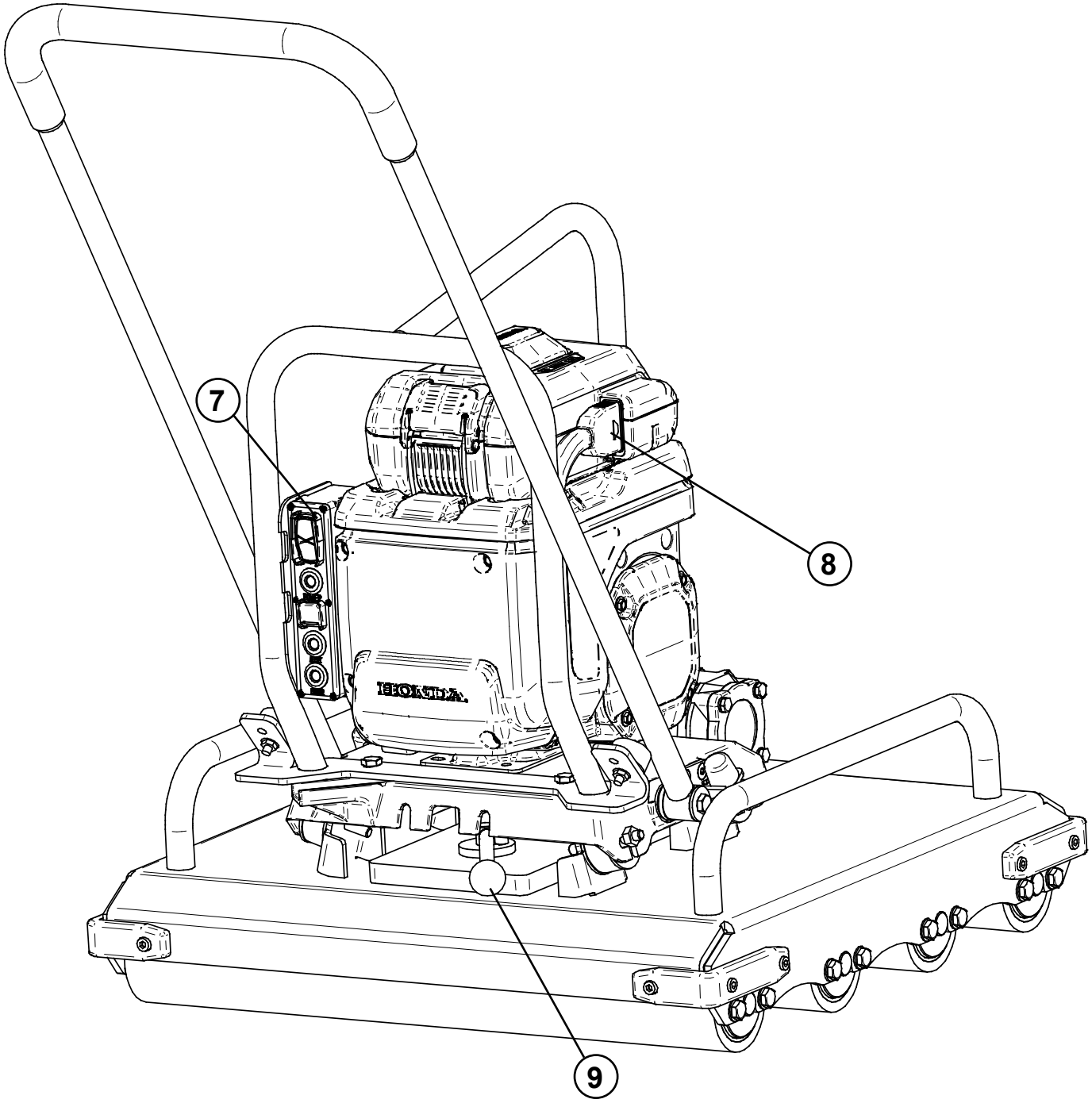

7 Switch box
8 Power cable
9 Parking brake

Before starting work

Perform the following tasks before starting to work in order to prevent failures or excessive wear.

Visual inspections

- ▶ Rubber buffers for crack formation
- ▶ Other damage

Other inspections

- ▶ Check all threaded unions for firm seat
- ▶ Verify compliance with the maintenance schedule

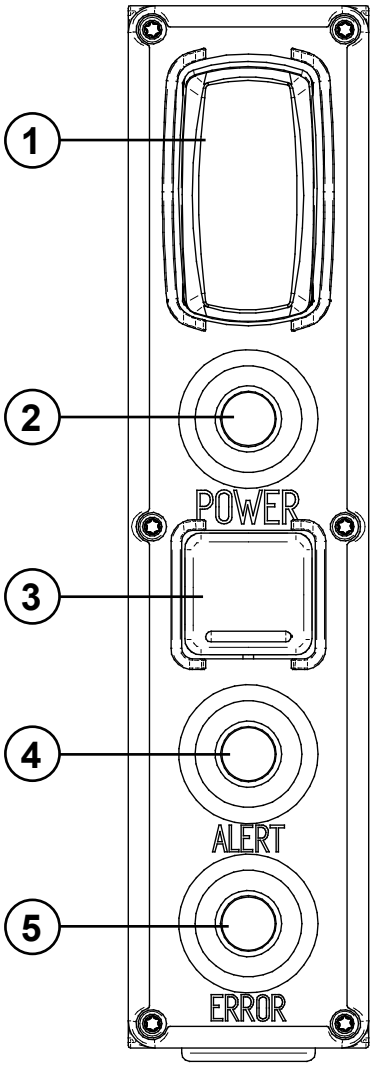

Switch box VPR

1	START/STOP	switch
2	POWER	indicator
3	POWER	switch
4	ALERT	indicator
5	ERROR	indicator

Working with the machine

Starting the engine

▶ Press the POWER switch.

✓ After all indicators light up for a few seconds, only the POWER indicator remains illuminated.

✓ The engine is ready for operation.

If the POWER switch is pressed with the START/STOP switch in the START position, the POWER indicator will not light up, and the ALERT indicator will flash. The engine cannot be started. In that case, move the START/STOP switch to the STOP position first.

If not used for approx. one minute after a press of the POWER switch, the engine will switch off again. The POWER indicator goes out.

Compacting

There is a crushing hazard between the machine and the wall during work in close proximity to walls.

▶ Use extra caution when working close to obstacles

⚠ CAUTION

Risk of injury if the machine is guided improperly.

▶ Guide the machine safely with both hands on the handle.

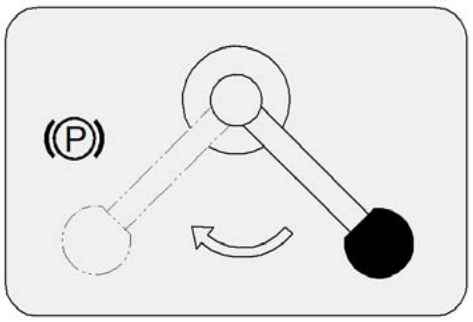

▶ Start the engine.

▶ Release the parking brake (position right)

▶ Bring the gas lever into the full-throttle position.

▶ Guide the machine with both hands on the handle.

▶ The machine is advanced by the operator.

Switching off the engine

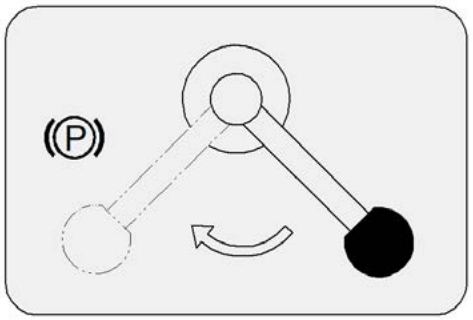

▶ Set the START/STOP switch to the STOP position.

✓ The engine stops, and the POWER indicator goes out.

Secure the machine against rolling away using the parking brake. (Position left)

You can also switch the engine off by pressing the POWER switch. However, it may take a while before it stops.

Installing the battery pack

▶ Make sure there is no dirt on the battery holder.



▶ Tip the battery back and insert the claw into the battery hook.

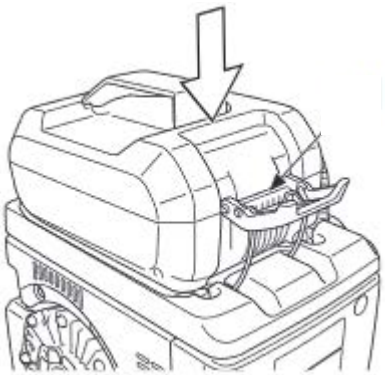

▶ Push the battery pack down and hook in the battery fastener.

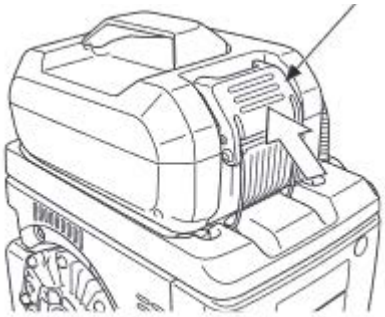

▶ Push up the battery fastening lever and lock the battery pack in place.

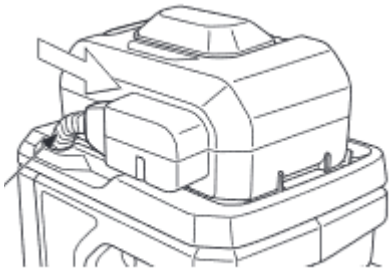

▶ Remove the protective cap from the battery connector and insert the power cable.

6. Transport

Transport of the machine requires that the battery pack be disconnected from the machine.

Lifting the machine

The machine can be lifted for loading onto a vehicle.

⚠ CAUTION

Risk of material damage and injuries. The use of defective or unsuitable lifting gear may cause the machine to fall down.

- ▶ Use slings that possess the appropriate carrying capacity.
- ▶ Lock the guide bar in place in the folded position.
- ▶ Fit the crane hook into the lifting ring and lift the machine up straight.

Transporting the battery pack on a vehicle

Transporting the battery pack on a vehicle requires that the battery pack be stored on a level surface. The battery pack must be secured such that it cannot move. Any regulations prescribing methods of transportation, such as requirements stipulating storage in a specific storage compartment, must be observed.

In addition, the following measures must be taken as well:

- ▶ Remove the battery pack from the machine and protect it with cushioning material.
- ▶ Make sure the inlet and outlet openings are pointing down when loading and securing the battery pack to keep rain water from entering the interior.
- ▶ Do not throw the battery pack.
- ▶ Avoid direct sunlight and refrain from transporting the battery pack in a location that may become very hot (e.g. a closed vehicle).
- ▶ Do not stack battery packs.
- ▶ Do not place luggage on top of the battery pack. Make sure that other pieces of luggage cannot slide and collide with the battery pack.

Transporting the battery pack on ships or planes

Shipment by third parties (e.g. by air freight or carriers) mandates that you follow specific requirements regarding packaging and labeling. Consult an expert in hazardous materials when preparing the item to be shipped for transport. Ship only battery packs that are undamaged. Also observe any and all national regulations.

7. Storage

Storage at the construction site

If stored at the construction site, e.g. over night, the machine must be secured against theft and unauthorized use.

Parked machines presenting an obstacle must be secured in accordance with statutory regulations, particularly in the area of public traffic surfaces.

Store the battery pack separately from the machine. Avoid direct sunlight and refrain from storing the battery pack in a location that may become very hot (e.g. a closed vehicle).

Storage for an extended period

If the machine will not be used for a period longer than one month, the following measures must be taken:

- ▶ Clean the entire machine thoroughly.
- ▶ Check the exciter for leaks. Correct any detected defects.
- ▶ Observe the information provided on long-term storage in the operating instructions of the battery pack.



If the machine is to be stored for longer than six months, contact the Weber MT's service organization to discuss additional measures.

8. Maintenance

General information

The section below contains instructions that need to be observed for regular maintenance. Read these instructions carefully and follow them in order to prevent downtimes of the machine caused by excessive wear or damage to the machine. Also read the safety instructions relevant to machine maintenance before you begin with the maintenance work. They help minimize the risk to maintenance personnel.

Maintenance personnel

Maintenance and repairs require specific qualifications. These operations may only be carried out by trained professionals. Maintenance personnel must be instructed on how to operate the machine by the owner or by the owner's assigned personnel.

Maintenance personnel are required to wear the personal protective equipment during work (see section “Safety“).

Safety

There is an increased risk of injury during maintenance and repairs, e.g. crushing at moving parts.

Following the conclusion of all maintenance and repairs, all protective fixtures must be refitted and placed back into operation.

Discharged operating fluids have a negative impact on the environment. They must be collected and stored in suitable containers. Disposal in accordance with environmental protection regulations.

All maintenance work may only be carried out when the engine is switched off. Safeguard the engine against unauthorized start attempts. To do so, remove the battery pack.

Before starting the machine after maintenance operations, make sure that all loose parts (screws, tool, etc.) have been removed from the machine. They can be drawn in or flung off by moving parts.

Keep the entire machine clean. The stickers must always be clearly legible. Damaged stickers must be replaced.

8.1. Maintenance overview

Activity \ Frequency	Initial maintenance / after 10 operating hours	Every 150 operating hours / every year	See section
Re-tighten all accessible threaded connections	**X**		
Change the oil in the exciter		**X**	8.2.1

The regulations and the operating and maintenance manuals of the engine manufacturer must be complied with in addition to the activities specified in the above maintenance overview.

8.2. Description of the maintenance operations

⚠ WARNING

If lubricating oils and fuel come into contact with skin, they can cause skin cancer.

- ▶ Wear protective gloves.
- ▶ If skin contact has occurred, wash the affected areas thoroughly.

8.2.1. Change the oil in the exciter

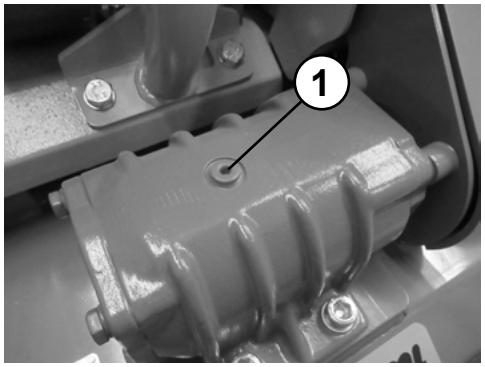

- ▶ Start the engine and allow the engine to warm up for a few minutes.
- ▶ Switch off the engine.
- ▶ Park the machine on a level subsurface.
- ▶ Loosen the oil drain plug (1).
- ▶ Use a suitable pump to suck out the oil.
- ▶ Fill fresh oil into the exciter in accordance with the specification.
- ▶ Close the oil drain plug.

Vibrator oil: SAE 10W40 (-10~ + 50 °C),
API-CD CE-CF-CG or SHPD or CCMC-D4-D5-PD1.
Fill quantity: 0.05 l.

8.2.2. Check V-belt

- ▶ Shut down the machine.

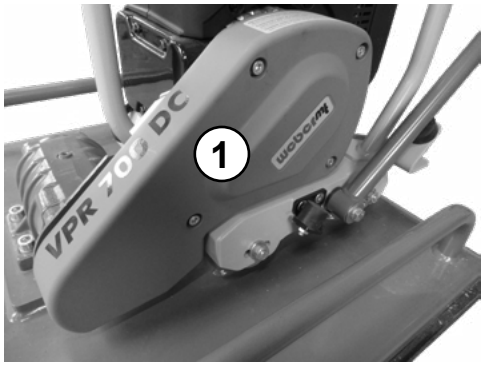

- ▶ Remove the V-belt guard (1).

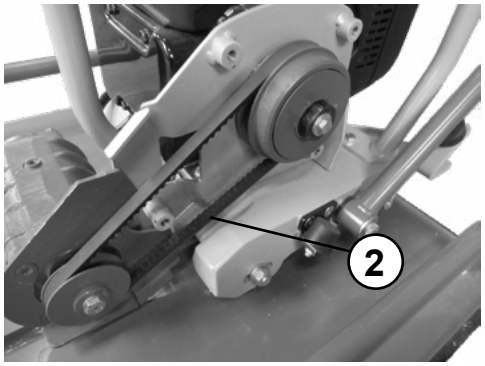

- ▶ Check the V-belt (2) for cracks and wear.
- ▶ Replace the V-belt if it shows signs of extensive wear or other damage.
- ▶ Fit the V-belt guard.

facebook.com/WeberMT

youtube.com/MyWeberMT

Weber Maschinentechnik GmbH
Im Boden 5-8, 10 · 57334 Bad Laasphe · Germany
Phone +49 2754 398 0 · Fax +49 2754 398 101
info@webermt.de · www.webermt.de

085100553-104 / VPR DC_2025-09
Original instructions